Infinium
Sliding Door

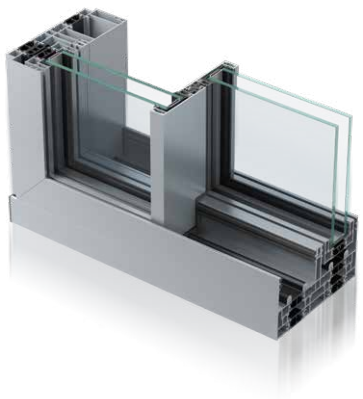

Infinium brings together indoor and outdoor living spaces in exquisite harmony.

Free-flowing spaces are created thanks to stunningly slim sightlines that bathe every surface with natural light. Uninterrupted panoramic landscapes provide complete escapism, without need of escape.

While seamlessly integrated floor-to-ceiling glazing reflects the clarity of thought behind every inspired design decision.

DESIGN FEATURES

- Fully concealed outer-frame
- 21mm central interlock
- One or more opening panels with large width dimensions up to 3000mm and height dimensions up to 3500mm
- Holds up to 400 kg panel weight

OPTIONS

- Available in double or triple track
- Glazing options of 38mm – 52mm
- Floating corner post option for larger opening space
- Single colour available as standard
- Available in a range of configurations
- Double or triple glazing solutions available on the same outer-frame

SPECIFICATIONS

Performance and accreditations	
U-Value (Double Glazing)	1.3 W/m²K
U-Value (Triple Glazing)	< 1.0 W/m²K
Air Permeability	Class 4 (600 Pa)
Water Tightness	Class 8A (450 Pa)
Wind Resistance	Class C3 (1200 Pa up to 160 km/h)
Cycle Testing	25,000
System depth	
Duo Rail	175mm
Tri Rail	267mm
Configurations	
Opening	Inline Sliding
Dual Rail	✓
Tri Rail	✓
Size and weight limits	
Max Sash Height	3500mm
Max Sash Width	3000mm
Max Sash Weight	400kg
Glazing	
Glazing Thickness	38mm-52mm
System features	
Single Colour	✓
Textured Finish	✓
Anodised Finish	✓
Multi-Point Locking	✓
Sightlines - Interlock	21mm

CONFIGURATIONS

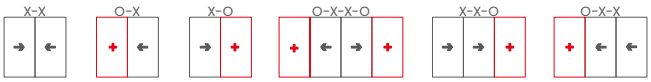

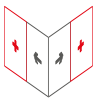

90° Corner Post

KEY

CAD CROSS SECTIONS AND THERMAL PROFILE

Additional details are available on request.

INFINIUM INTERLOCK

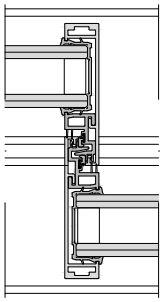

INFINIUM JAMB DETAIL

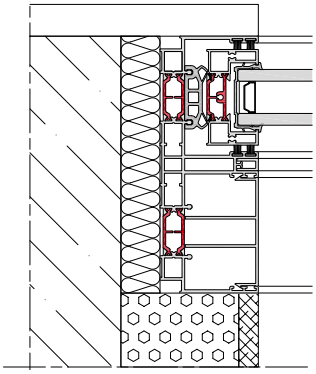

INFINIUM CILL DETAIL

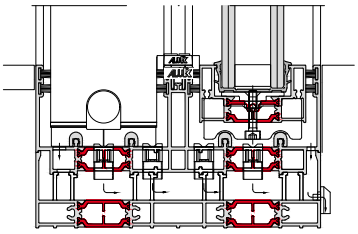

INFINIUM THERMAL PROFILE

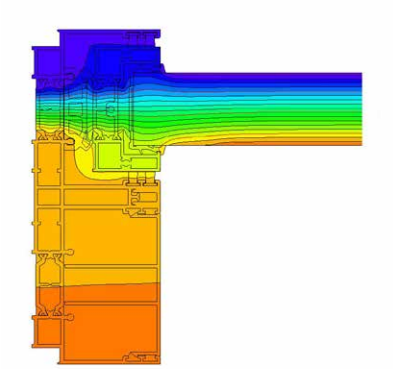
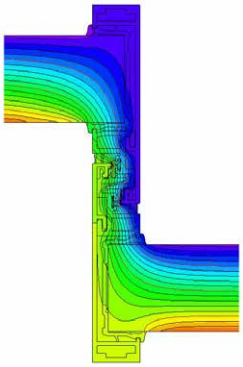
INFINIUM THERMAL INTERLOCK